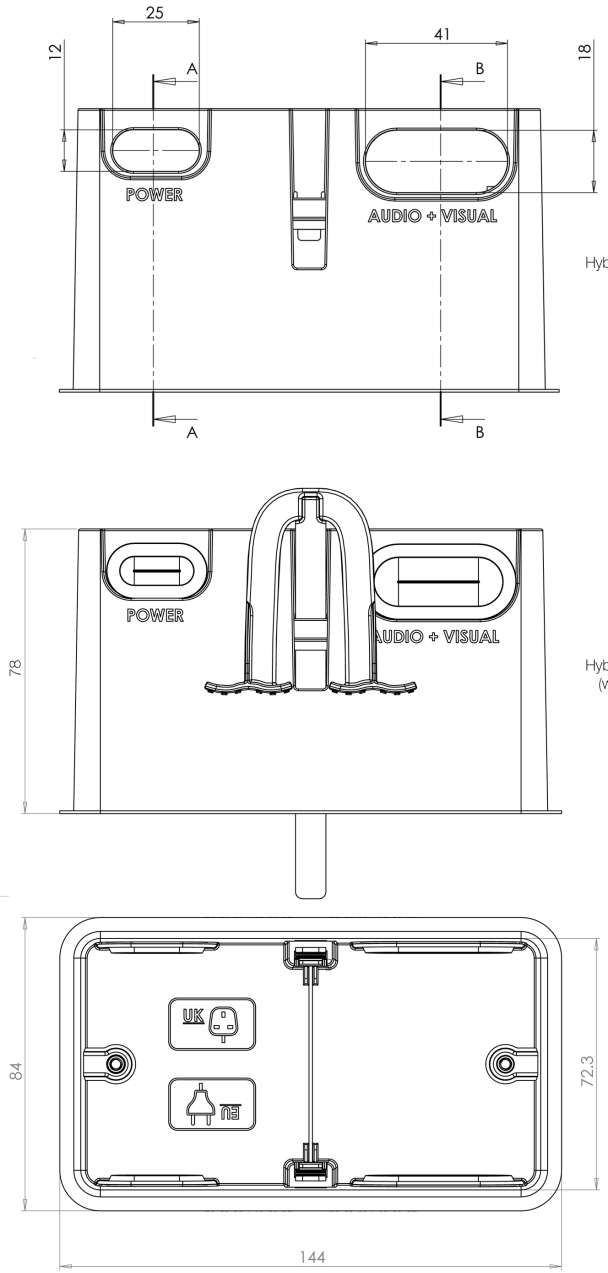

Hybrid Installation Box

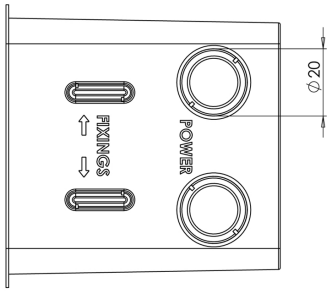

Hybrid Installation Box
(with fast fix strap)

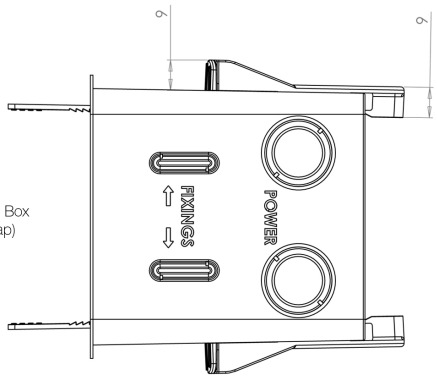

Syncbox Frame

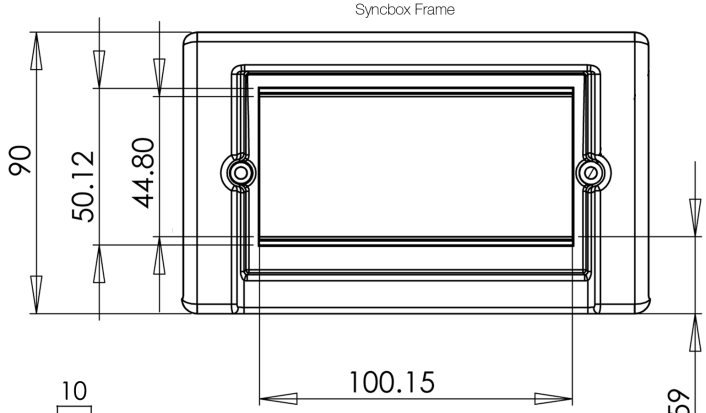

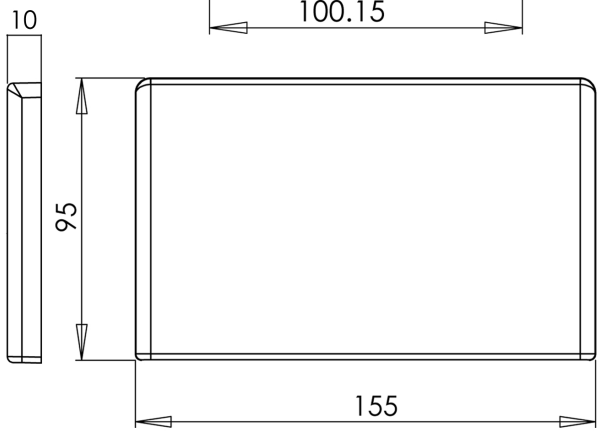

Syncbox Cover Plate

REV.	DESCRIPTION	DATE	APPROVED
	REVISIONS		

PROPRIETARY AND CONFIDENTIAL
THE INFORMATION CONTAINED IN THIS DRAWING IS THE SOLE PROPERTY OF ANY REPRODUCTION IN PART OR AS A WHOLE WITHOUT THE WRITTEN PERMISSION OF Inpress Plastics Ltd IS PROHIBITED.

DIMENSIONS ARE IN mm
TOLERANCES:
FRACTIONAL ±
ANGULAR: ± 0.5°
NO DECIMAL PLACE ± 1
ONE PLACE DECIMAL ± 0.5
TWO PLACE DECIMAL ± 0.15

MATERIAL

FINISH

DO NOT SCALE DRAWING

	NAME	DATE
DRAWN		
CHECKED		
ENG APPR.		
MFG APPR.		
Q.A.		

COMMENTS:

syncbox

SIZE A3 | DWG. NO. | REV.

SCALE: 1:1 | WEIGHT: 91.47 | SHEET 4 OF 6